tierratech®
ULTRASONIC CLEANING SYSTEMS

ADVANCED ULTRASONIC SYSTEMS FOR A CLEANER FUTURE



TT-200N ADVANCED

Speed

Energy Savings

Robustness and Reliability
With TierraTech guarantee

Silence
60 db maximum

Ergonomics
Simplicity and comfort

Water savings
Complete watertightness that prevents loss of water by evaporation

TT-200N ADVANCED

Generators and Emitters

1 Ultrasonic generator with an output power of 1700W(3400Wp-p). With a working frequency of 40 kHz sweep system ± 2%.

1 submersible emitter with a power of 1700W (3400Wp-p). Made or 0,098" inch thinck stainless steel AISI 316L. The emitter contains 34 PZT (lead zirconate titanate) piezo-electric transducers with aluminium alloy body.

Technical data and measures

Ultrasonic cleaning tank made of 0,008" thick AISI 304L stainless steel 0.79" thick thermal-acoustic insulation.

Tank capacity: 57 gallons
WFS capacity: 8.72 gallons

Tank lid made of stainless steel AISI 304L lid with 0.39" thick thermal-acoustic insulation, with an opening/closing mechanism.

Pneumatic platform made of AISI 304L stainless steel, cover with thermal-acoustic insulation and opening/closing system with pneumatic cylinder and up to 441 Lb of capacity.

WFS (Waterflow system for oil separation) An independent tank separate from the cleaning tank, designed to capture surface oils and particles, including a drainage system for oil removal.

Electrical resistance with 3750W power, made of AISI 316L stainless steel, an alloy resistant to high temperatures and corrosion.

Optional: TTF1 bag filter for removing sludge from the bottom of the tank. Made of AISI 304L stainless steel, with a pressure gauge and the ability to integrate filter bags ranging from 5 to 200 µm.

Control Panel

7" Screen & TFT Display.

Time control for time control of equipment preheating, weekly calendar, alarms, heating element, as well as full control of the lifting platform and water level. It includes the ability to create different work programs.





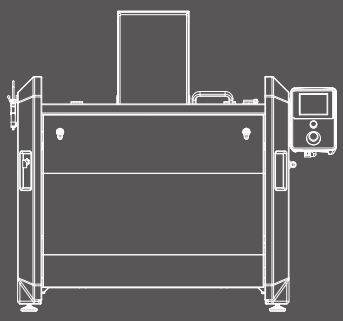

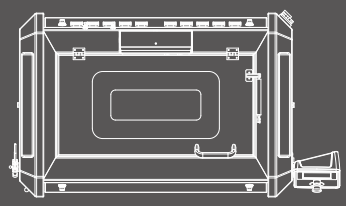

CAPACITY 57 GALLONS

INTERNAL DIMENSIONS
29,9"x20,5"x23,2" inch

PLATFORM DIMENSIONS
28,7"x18,1"x15" inch

EXTERNAL DIMENSIONS
60,2"x37"x37" inc

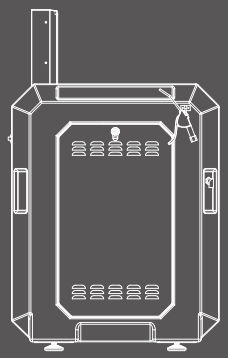

tierratech@tierratech.com